Mineral Insulated RTD

Straight RTD Elements

Operating Temperature:
-200 C to +500 C Max.

Model Code: 1M

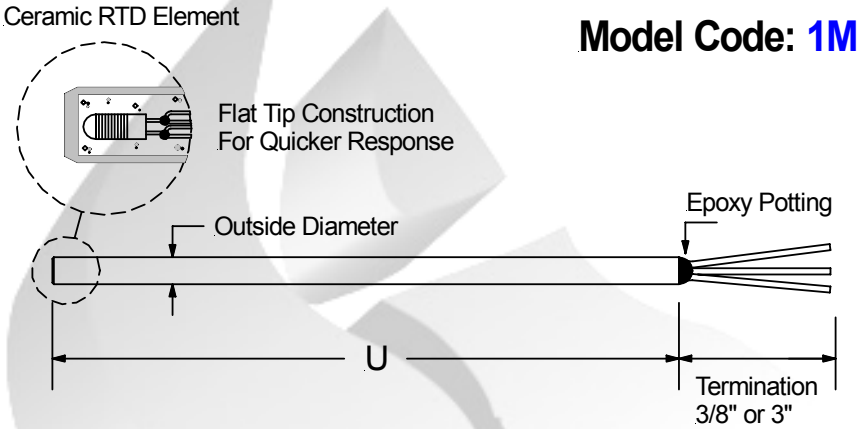

Optional Male Connector

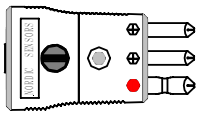

Optional Female Connector

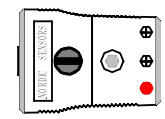

Model: 1M

A	B	C	D		E	F		G
				–			—	

A	Outside Diameter
1	0.079"
2	0.125"
3	0.188"
4	0.250"

B	Sheath Material
A	304 Stainless
B	316 Stainless

C	"U" Dimension
Specify " U " Length In Inches	0 0 6

Example "U" is 6" = 006

D	"U" Fractional Dimension
A	0.125"
B	0.188"
C	0.250"
D	0.315"
E	0.375"
F	0.500"
G	0.625"
H	0.750"
I	0.875"
N	None

E	RTD Element Type	
Ohms	Class A	Class B
1 x Pt100	1	2
2 x Pt100	3	4
1 x Pt1000	5	6
2 x Pt1000	7	8

Temperature Coefficient: 0.00385
Platinum element
IEC 751

F	RTD Wire Connection
A	2 Wire Configuration
B	3 Wire Configuration
C	4 Wire Configuration

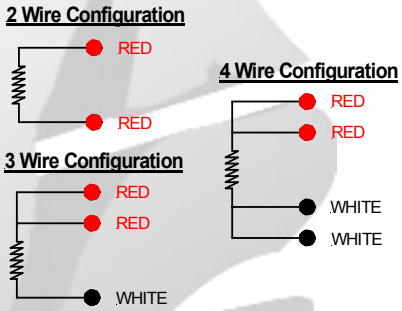

G	Termination Type
1	3/8" Split Bare Ends.
2	3" Split & Color Coded Leads.
3	Standard Male Plug
4	Standard Female Jack
5	Mini Male Plug
6	Mini Female Jack

Connectors can only be installed on 2 & 3 wire configuration RTDs.

Nordic Sensors Ind. Inc. Tel: 1-888-667-3421 & Fax: 1-888-867-9986.